PIHER

T-18 18 mm Carbon Potentiometer

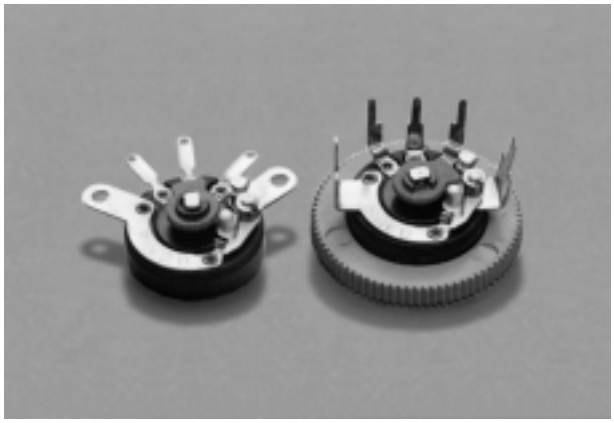

FEATURES

- Carbon resistive element.
- Dust proof enclosure.
- With or without actuating knob
- Optional SPST switch

MECHANICAL SPECIFICATIONS

- Mechanical rotation angle: 255° ± 5°
- Electrical rotation angle: 220° ± 20°
- Torque: 0.5 to 1.5 Ncm. (0.7 to 2.1 in-oz)
- Stop torque: > 40 Ncm. (> 56 in-oz)

ELECTRICAL SPECIFICATIONS

- Range of values (*)
  100Ω ≤ Rn ≤5 M (Decad. 1.0 - 2.0 - 2.2 - 2.5 - 4.7 - 5.0)
- Tolerance (*): 100Ω ≤ Rn ≤ 1M Ω ------ ± 20%
  1MΩ < Rn ≤ 5M Ω ------ ± 30%
- Max. Voltage: 200 VDC (lin) 100 VDC (no lin)
- Nominal Power 50°C (122°F) (see power rating curve)
  0.25 W (lin) 0.12 W (no lin)
- Taper (*) (Log. & Alog. only Rn > 1K) Lin ; Log; Alog.
- Residual resistance: ≤ 0.1% Rn (2 Ω min.)
- Equivalent Noise Resistance: ≤ 3% Rn (3 Ω min.)
- Operating temperature**: –25°C + 70°C (–13°F + 158°F)

* Others upon request

** Up to 85°C depending on application

HOW TO ORDER

STANDARD

T-18	A	I	1	473	B	2020
Series	Terminals	Switch	Thumbwheel	Value	Taper	Tolerance
T-18	A = PCB B = Solder Lugs	I = with S = without	S = sb/st T = sb/ct 1 = Fig. 1 2 = Fig. 2 3 = Fig. 3 4 = Fig. 4 (See note 1)	101 = 100Ω 203 = 20K 504 = 500K 505 = 5M (See note 2)	A = Linear B = Log. C = Alog. (See note 4) Others tapers on request	2020 = +/-20% 3030 = +/-30% (See note 3)

NOTES:

(1) Thumbwheel: S = without knob, without screw
T = without knob, with screw
Fig. 1, 2 y 3: countersunk knob
Fig. 4: knob with screw
knob colour: Black

(2) Value: • Code: 10 1 100Ω
10 → 2 first digits of the value.
1 → Number of zeros
Others values upon request.

(3) Tolerance (non standard), upon request.
Rotary switch with Alog. curve is not available.

Example code: +7 / -5 = 07 05
05 → negative tolerance
07 → positive tolerance

(4) Switch option not available with antilog taper.

NOTE: The information contained here should be used for reference purposes only.

ISO TS 16949 / ISO 14001 / ISO 9001

MEGGITT

HOW TO ORDER CUSTOM DRAWING

T-18 A I + DRAWING NUMBER (Max. 16 digits)

This way of ordering should be used for options which are not included in the "How to order" standard and optional extras.

TERMINALS

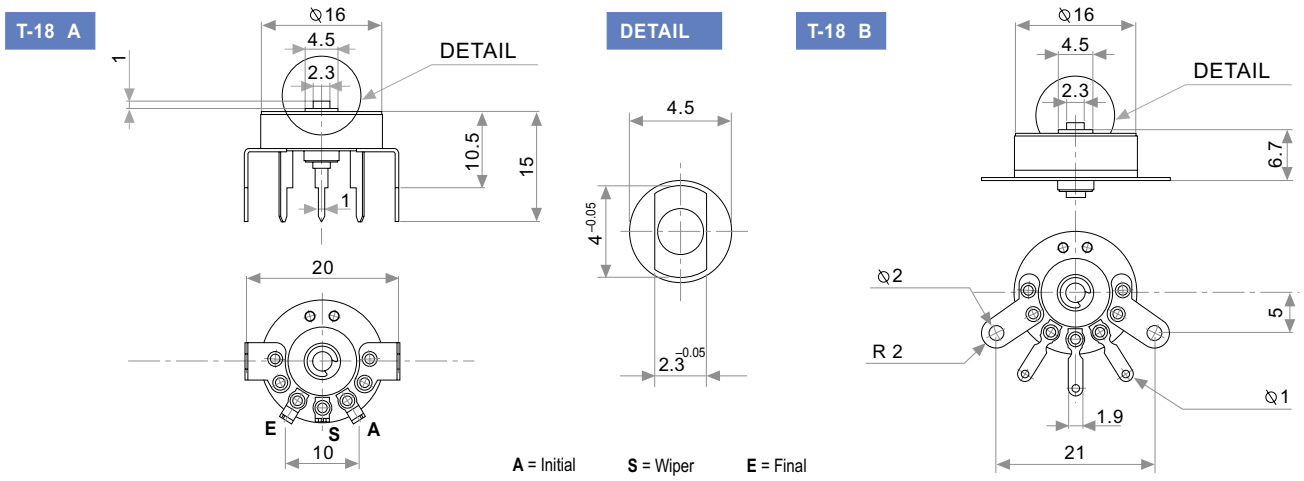

SWITCH

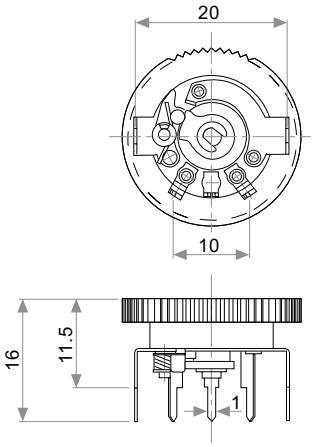

ELECTRICAL AND MECHANICAL	
SWITCH RATING	0.5 A; 12V DC
SWITCH OPERATING ANGLE	25°±10°
MECHANICAL LIFE (CYCLES)	10.000

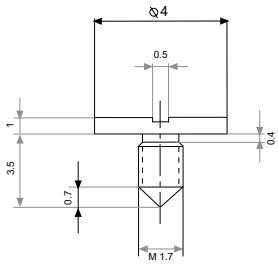

SCREW

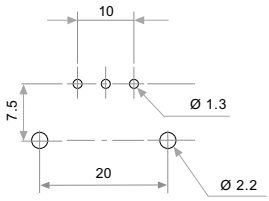

FOOTPRINT

POWER RATING CURVE

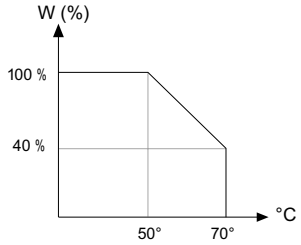

THUMBWHEEL

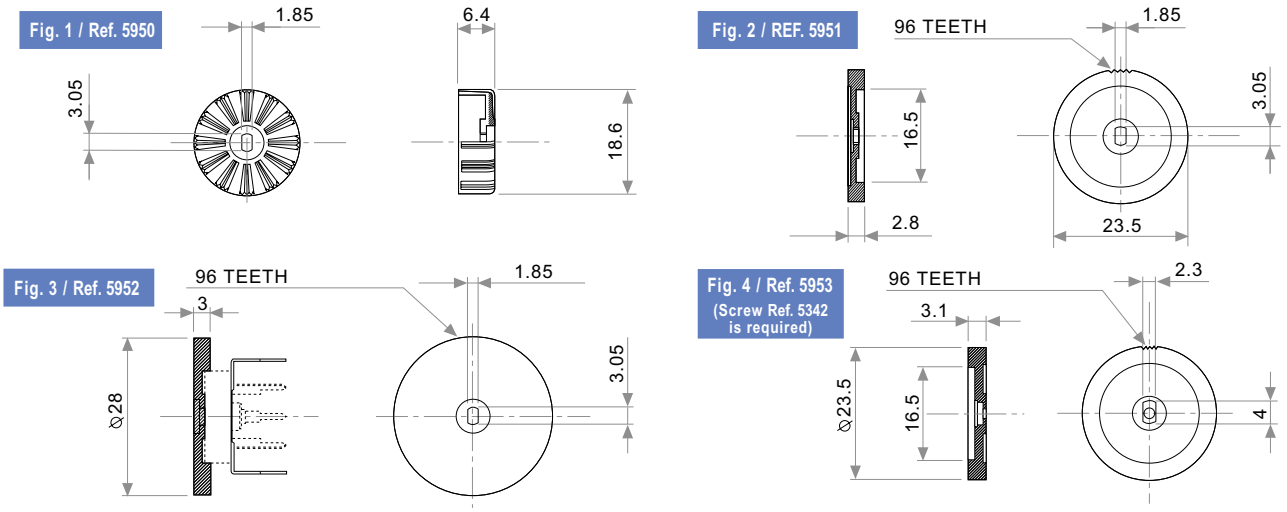

TESTS / TYPICAL VARIATIONS

ELECTRICAL LIFE	1.000 h. @ 50°C; 0.25 W	±5 %
MECHANICAL LIFE : POT.	25.000 (10-15 CPM)	±3 % (Rn < 1 M)
TEMPERATURE COEFFICIENT	–25 ° C; +70 ° C	±300 ppm (Rn <100 K)
THERMAL CYCLING	16 h. @ 85 ° C; 2h @ –25 ° C	±2.5 %
DAMP HEAT	500 h. @ 40 ° C @ 95% HR	±5 %
VIBRATION (for each plane X,Y,Z)	2 h. @ 10 Hz - 55 Hz.	±2 %

NOTE: Out of range values may not comply these results.