WIMA DC-LINK HY

Metallized Polypropylene (PP) - Capacitors for Hybrid Drives. Capacitance 500 µF. Rated Voltage 450 VDC.

Special Features

- **Very high volume/capacitance ratio**
- **Self-healing, internal safety disconnector**
- **Safe contact configuration by screwable plates**
- **Dry construction without electrolyte or oil**
- **Very low dissipation factor**
- **Negative capacitance change versus temperature**
- **Very low dielectric absorption**
- **According to RoHS 2011/65/EU**
- **Customer-specific capacitances or voltages on request**

Typical Applications

As intermediate circuit capacitor e.g. in hybrid drives

Construction

Dielectric:
Polypropylene (PP) film
Capacitor electrodes:
Vacuum-deposited
Internal construction:

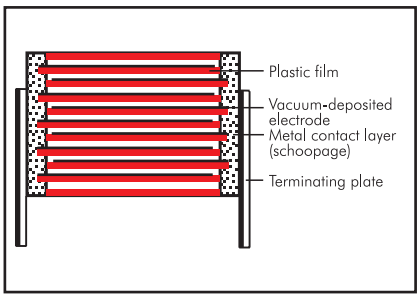

Encapsulation:
Solvent-resistant, flame-retardant plastic case with PU seal, UL 94 V-0
Terminations:
Tinned plates
Marking:
Colour: Black. Marking: Gold.

Electrical Data

Capacitance range:
500 µF
Rated voltage:
450 VDC
Capacitance tolerances:
±20%, ±10%, (±5% available subject to special enquiry)
Operating temperature range:
–55° C to +85° C (hot spot ⩽+110° C in combination with a heatsink)
Insulation resistance at +20° C:
⩾ 10 000 sec (MΩ x µF)
Measuring voltage: 100 V/1 min.

Dielectric loss factor tan δ_0: 2 x 10^{-4}
Test voltage: 1.3 U_r, 2sec
Dielectric absorption: 0.05 %
Voltage derating:
A voltage derating factor of 1.35 % per K must be applied from +85° C for DC voltage.
Reliability:
Operational life > 100 000 hours at 40° C
Failue rate < 36 fit (0.75 x U_r and 40° C)

Mounting Recommendation

Excessive mechanical strain, e.g. pressure or shock onto the capacitor body, is to be avoided during mounting and usage of the capacitors. When fixing the capacitor the screw torque is to be limited to max. 5 Nm.

Packing

Transport-safe packing in cardboard boxes.

For further details and graphs please refer to Technical Information.

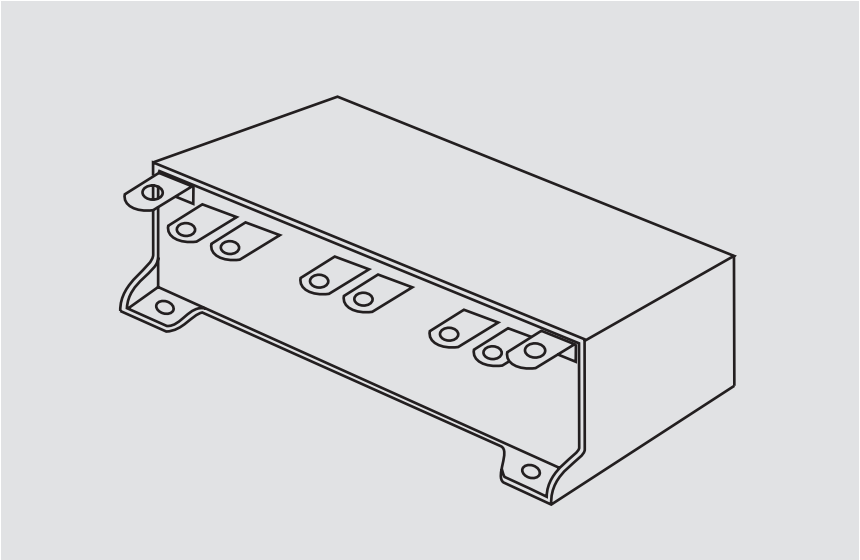

Continuation

General Data

Capacitance	U_R	I_{max} A	I_{rms}* A	L_e nH	ESR* mΩ	Approx. weight g	Part number
500 µF	450 VDC	5000	120**	< 15	0.8**	1400	DCHYH06500JG00_ _ _ _

* f = 1kHz

** General guide

Customized solutions can be realized on request

Part number completion:	
Tolerance:	20 % = M
	10 % = K
	5 % = J
Packing:	bulk = S
Pin length:	none = 00

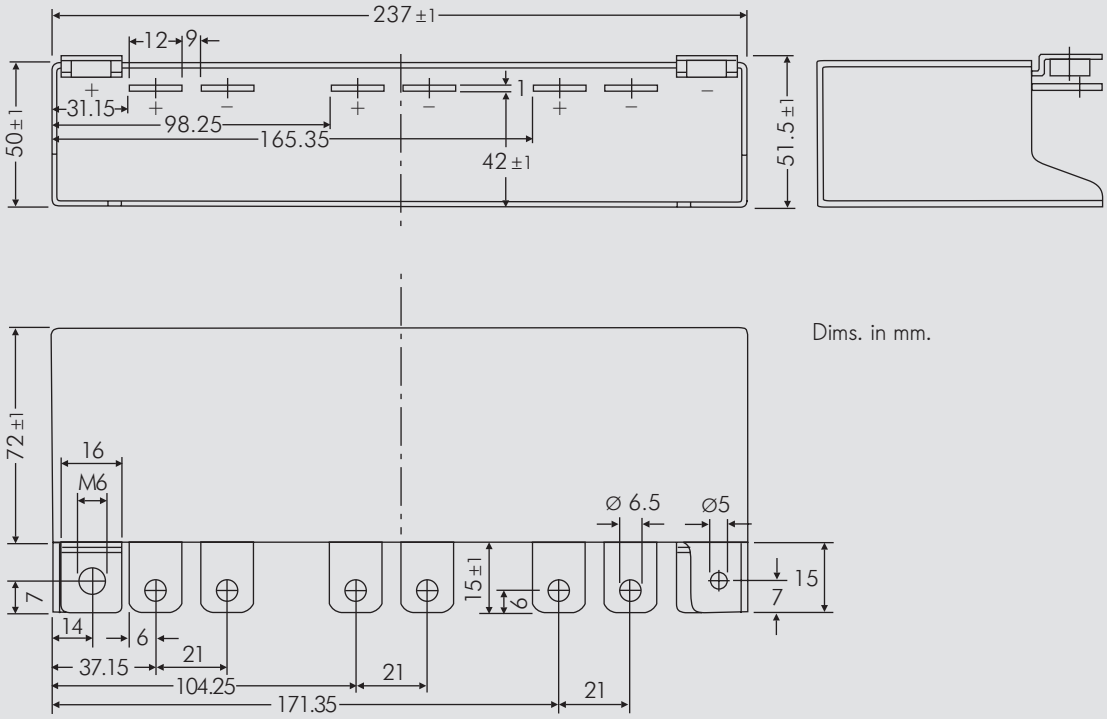

Dims. in mm.

Rights reserved to amend design data without prior notification.

WIMA Part Number System

A WIMA part number consists of 18 digits and is composed as follows:

Field 1 - 4: Type description
Field 5 - 6: Rated voltage
Field 7 - 10: Capacitance
Field 11 - 12: Size and PCM
Field 13 - 14: Version code (e.g. Snubber versions)
Field 15: Capacitance tolerance
Field 16: Packing
Field 17 - 18: Pin length (untaped)

1	2	3	4	5	6	7	8	9	10	11	12	13	14	15	16	17	18
M	**K**	**S**	**2**	**C**	**0**	**2**	**1**	**0**	**0**	**1**	**A**	**0**	**0**	**M**	**S**	**S**	**D**
MKS 2				63 VDC		0.01 µF				2.5x6.5x7.2		-		20%	bulk	6 -2	

Type description:

SMD-PET	= SMDT
SMD-PEN	= SMDN
SMD-PPS	= SMDI
FKP 02	= FKP0
MKS 02	= MKS0
FKS 2	= FKS2
FKP 2	= FKP2
FKS 3	= FKS3
FKP 3	= FKP 3
MKS 2	= MKS2
MKP 2	= MKP2
MKS 4	= MKS4
MKP 4C	= MKPC
MKP 4	= MKP4
MKP 10	= MKP1
FKP 1	= FKP1
MKP-X2	= MKX2
MKP-X1 R	= MKX1
MKP-Y2	= MKY2
MP 3-X2	= MPX2
MP 3-X1	= MPX1
MP 3-Y2	= MPY2
MP 3R-Y2	= MPRY
MKP 4F	= MKPF
Snubber MKP	= SNMP
Snubber FKP	= SNFP
GTO MKP	= GTOM
DC-LINK MKP 3	= DCP3
DC-LINK MKP 4	= DCP4
DC-LINK MKP 4S	= DCPS
DC-LINK MKP 5	= DCP5
DC-LINK MKP 6	= DCP6
DC-LINK HC	= DCHC
DC-LINK HY	= DCHY

Rated voltage:

50 VDC	= B0
63 VDC	= C0
100 VDC	= D0
250 VDC	= F0
400 VDC	= G0
450 VDC	= H0
520 VDC	= H2
600 VDC	= I0
630 VDC	= J0
700 VDC	= K0
800 VDC	= L0
850 VDC	= M0
900 VDC	= N0
1000 VDC	= O1
1100 VDC	= P0
1200 VDC	= Q0
1250 VDC	= R0
1500 VDC	= S0
1600 VDC	= T0
2000 VDC	= U0
2500 VDC	= V0
3000 VDC	= W0
4000 VDC	= X0
6000 VDC	= Y0
250 VAC	= 0W
275 VAC	= 1W
300 VAC	= 2W
305 VAC	= AW
350 VAC	= BW
440 VAC	= 4W
500 VAC	= 5W
...	

Capacitance:

22 pF	= 0022
47 pF	= 0047
100 pF	= 0100
150 pF	= 0150
220 pF	= 0220
330 pF	= 0330
470 pF	= 0470
680 pF	= 0680
1000 pF	= 1100
1500 pF	= 1150
2200 pF	= 1220
3300 pF	= 1330
4700 pF	= 1470
6800 pF	= 1680
0.01 µF	= 2100
0.022 µF	= 2220
0.047 µF	= 2470
0.1 µF	= 3100
0.22 µF	= 3220
0.47 µF	= 3470
1 µF	= 4100
2.2 µF	= 4220
4.7 µF	= 4470
10 µF	= 5100
22 µF	= 5220
47 µF	= 5470
100 µF	= 6100
220 µF	= 6220
1000 µF	= 7100
1500 µF	= 7150
...	

Size:

4.8x3.3x3 Size 1812	= KA
4.8x3.3x4 Size 1812	= KB
5.7x5.1x3.5 Size 2220	= QA
5.7x5.1x4.5 Size 2220	= QB
7.2x6.1x3 Size 2824	= TA
7.2x6.1x5 Size 2824	= TB
10.2x7.6x5 Size 4030	= VA
12.7x10.2x6 Size 5040	= XA
15.3x13.7x7 Size 6054	= YA
2.5x7x4.6 PCM 2.5	= 0B
3x7.5x4.6 PCM 2.5	= 0C
2.5x6.5x7.2 PCM 5	= 1A
3x7.5x7.2 PCM 5	= 1B
2.5x7x10 PCM 7.5	= 2A
3x8.5x10 PCM 7.5	= 2B
3x9x13 PCM 10	= 3A
4x9x13 PCM 10	= 3C
5x11x18 PCM 15	= 4B
6x12.5x18 PCM 15	= 4C
5x14x26.5 PCM 22.5	= 5A
6x15x26.5 PCM 22.5	= 5B
9x19x31.5 PCM 27.5	= 6A
11x21x31.5 PCM 27.5	= 6B
9x19x41.5 PCM 37.5	= 7A
11x22x41.5 PCM 37.5	= 7B
19x31x56 PCM 48.5	= 8D
25x45x57 PCM 52.5	= 9D
...	

Version code:

Standard	= 00
Version A1	= 1A
Version A1.1.1	= 1B
Version A2	= 2A
...	

Tolerance:

±20%	= M
±10%	= K
±5%	= J
±2.5%	= H
±1%	= E
...	

Packing:

AMMO H16.5 340x340	= A
AMMO H16.5 490x370	= B
AMMO H18.5 340x340	= C
AMMO H18.5 490x370	= D
REEL H16.5 360	= F
REEL H16.5 500	= H
REEL H18.5 360	= I
REEL H18.5 500	= J
ROLL H16.5	= N
ROLL H18.5	= O
BLISTER W12 180	= P
BLISTER W12 330	= Q
BLISTER W16 330	= R
BLISTER W24 330	= T
Bulk/TPS Standard	= S
...	

Pin length (untaped)

3.5 ±0.5	= C9
6 -2	= SD
16 ±1	= P1
...	

Pin length (taped)

none	= 00

The data on this page is not complete and serves only to explain the part number system. Part number information is listed on the pages of the respective WIMA range.

04.18